PP Pump

PVDF Pump

KORAX KDP-05

Plastic Pump

PARAMETERS

Max. Working pressure	100psi(0.7Mpa, 7bar)
Max. Flow rate	60lpm(15gpm)
Max. Reciprocating speed	400cpm
Max. Suction height(dry sucking)	4m
Max. Permitted grain	2.5mm
Max air consumption	20scfm(10l/s)
Air inlet size	1/4inch
Air outlet size	3/8inch
Fiuid suction size	1/2inch & 3/4inch
Fluid discharge size	1/2inch & 3/4inch
Net Weight	PP Pump 3kg PVDF Pump 4kg

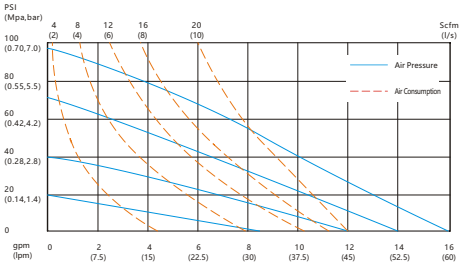
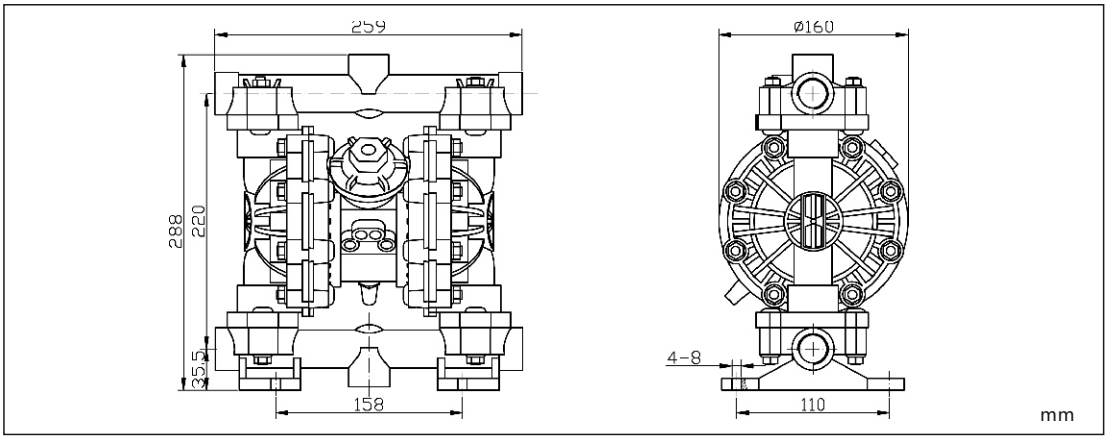
DIMENSIONS